5
3, 4
2
7
1
6

Item	Parts Designation	Part No.	Ident. No.	Qty of parts per 100 arms/ devices	Req. per Maint. Unit	Remarks
1	2	3	4	5	6	7
1	Receiver with barrel and pertaining assemblies and subassemblies	100229/5-111	206492			Illustration 2
2	Bolt	1013-20	205669			Illustration 3
3	Grip assembly					Illustration 4
4	Trigger mechanism	100229/5–03.30	206571			Illustration 5
5	Back plate with butt stock	100229/5–499	206596			Illustration 6
6	Handguard	100229/1–1691.16	205977			Illustration 7
7	Magazin 7.62 mm x 51	1015–10	205554			Illustration 8
	Retractable butt stock – Applicable only to rifle with retractable butt stock instead of the fixed butt stock version, see Item 5 –	100229–404/1	206728			Illustration 9

Receiver with barrel and pertaining assemblies and subassemblies

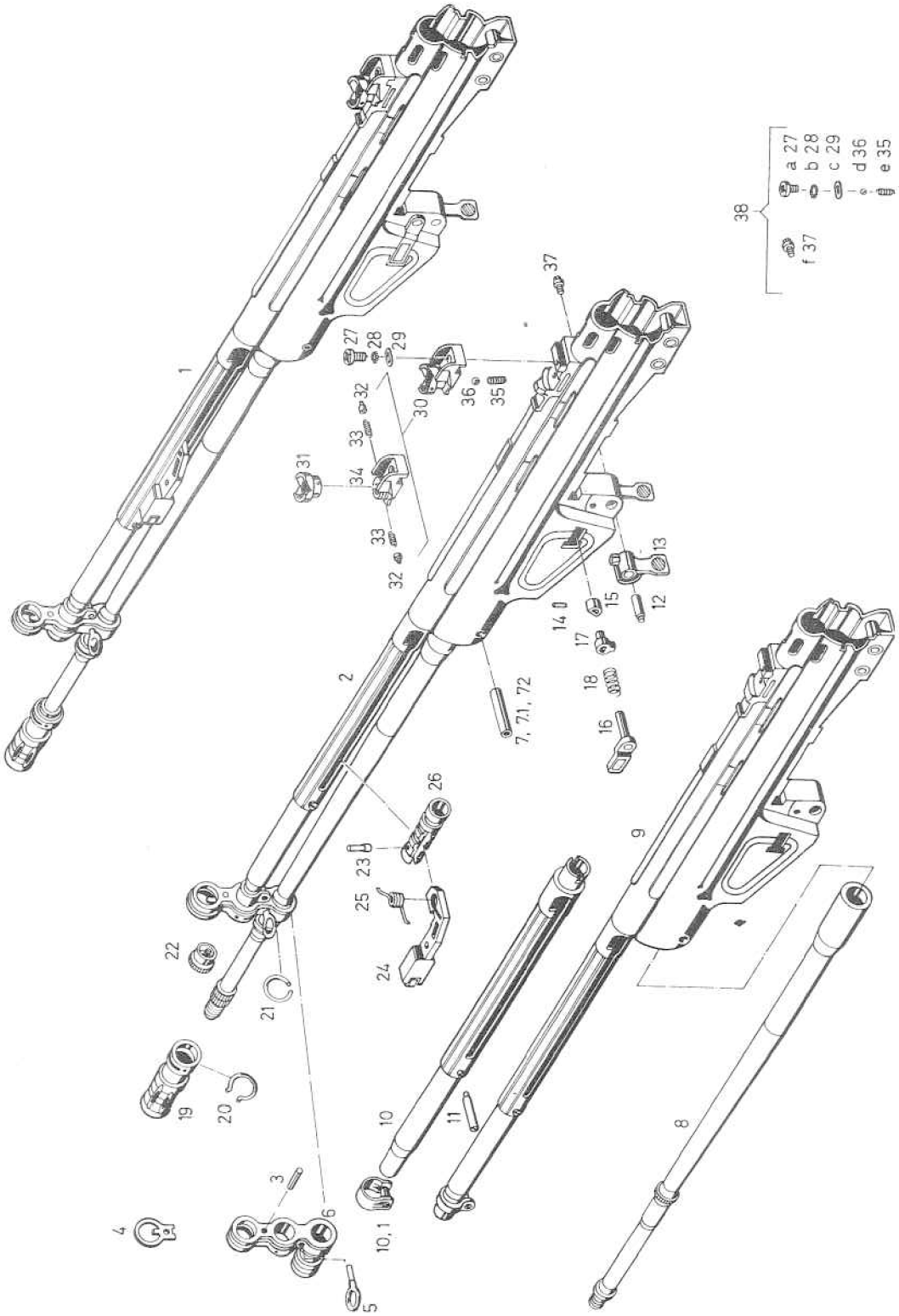

HECKLER & KOCH GMBH
OBERNDORF/NECKAR

Rifle G3 Export

Receiver with barrel and pertaining assemblies and subassemblies

cf. Illustration 2

Edition: 1a/TD 2291–679

Item	Parts Designation	Part No.	Ident. No.	Qty of parts per 100 arms/devices	Req. per Maint. Unit	Remarks
1	2	3	4	5	6	7
1	Receiver with barrel, cocking lever and sights	100229/5-111	206492			Marking acc. to contract
2	Receiver with barrel, cocking lever housing and magazine release lever	100229/5–111.491/1	206731		without drawing	Marking acc. to contract
3	Clamping sleeve	4 x 12 DIN 1481	922609			
4	Front sight	1013–101.51	200415			
5	Eyebolt	1013–111.610	201241			
6	Front sight holder	1013–111.54	200411			
7	Cylindrical pin	1013–01.97	200437			
7.1	Cylindrical pin	1013–01.971	200712			oversize 0.01 mm
7.2	Cylindrical pin	1013–01.972	201262			oversize 0.015 mm
8	Barrel	1013–111.896	200986			milled for Item 7
9	Receiver with cocking lever housing	100229/5–111.072	206972			
10	Cocking lever housing with stop abutment	1013–111.191	200421			
10.1	Holding clip with bush	1013–111.73	200481			

Item	Parts Designation	Part No.	Ident. No.	Qty of parts per 100 arms/ devices	Req. per Maint. Unit	Remarks
1	2	3	4	5	6	7
11	Pin for stop abutment	1013–101.147	200422			
12	Bush for magazine release lever	1013–01.78	200397			
13	Magazine release lever, compl.	1013–111.790	205570			
14	Clamping sleeve	2.5 x 10 DIN 1481	929473			
15	Push button for magazine catch	1013–01.27	200396			
16	Magazine catch, compl.	1013–01.20/1	205618			
17	Contact piece for magazine catch	1013–01.26	200394			
18	Compression spring for magazine catch	1013–01.25	200393			
19	Flash-hider, compl.	1013–101.100	200368			
20	Retaining spring for flash-hider	1013–101.102	200370			
21	Spring ring	1013–01.48	200407			
22	Cap, compl.	100229/5–01.14	206497			
23	Cocking lever axle	1013–01.37	200403			
24	Cocking lever	1013–01.43	200405			

Item	Parts Designation	Part No.	Ident. No.	Qty of parts per 100 arms/ devices	Req. per Maint. Unit	Remarks
1	2	3	4	5	6	7
25	Cocking lever elbow spring	1013–01.42	200404			
26	Cocking lever support	1013–01.36	200402			
27	Clamping screw	1013–101.29	200372			
28	Toothed lock washer	A 5,3 DIN 6798	922617			to Item 38
29	Washer	1013–101.28	200371			
30	Rotary rear sight	100229/5–101.05	206495			
31	Rear sight cylinder	1013–101.06/3	206496			
32	Catch bolt	1013–101.16	200381			
33	Spring for catch bolt	1013–101.17	200382			
34	Sight support	1013–101.07	200375			
35	Ball spring	1013–101.09	200383			
36	Ball	3 mm III–6 DIN 5401	929897			
37	Windage adjusting screw	1013–101.30	200384			

Item	Parts Designation	Part No.	Ident. No.	Qty of parts per 100 arms/ devices	Req. per Maint. Unit	Remarks
1	2	3	4	5	6	7
38	Spare parts set to rotary rear sight, consisting of:	St 1013–300	200988			
	a) 1 Clamping screw					see Item 27
	b) 1 Toothed lock washer					see Item 28
	c) 1 Washer					see Item 29
	d) 1 Ball 3 mm (+ 1 spare ball)					see Item 36
	e) 1 Compression spring (+ 1 spare spring)					see Item 35
	f) 1 Windage adjusting screw					see Item 37

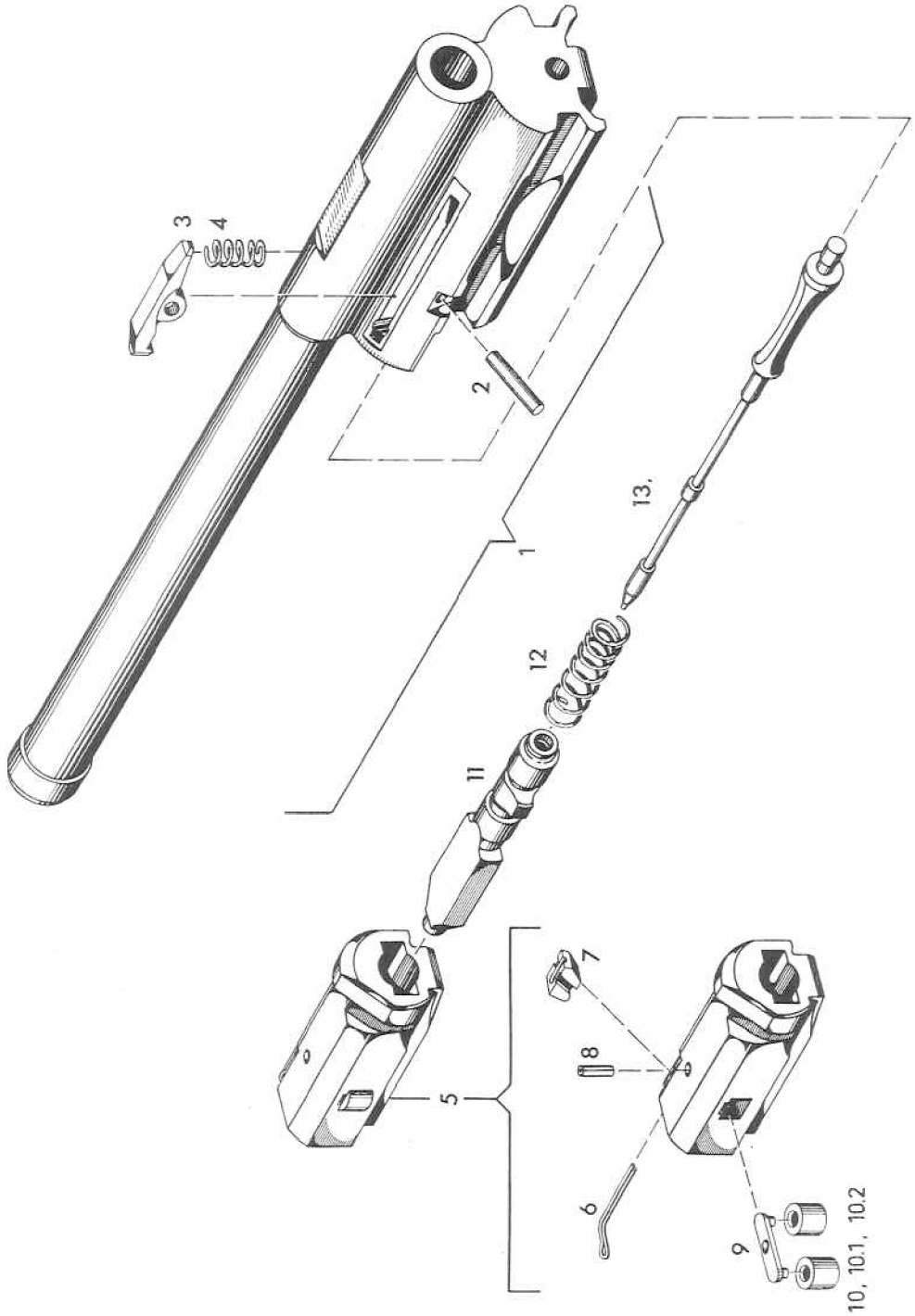
1
2
3
4
5
6
7
8
9
10, 10.1, 10.2
11
12
13.

HECKLER & KOCH GMBH OBERNDORF/NECKAR	Rifle G3 Export	Bolt	cf. Illustration 3	Edition: 1a/TD 2291 Page: 1

Item	Parts Designation	Part No.	Ident. No.	Qty of parts per 100 arms/ devices	Req. per Maint. Unit	Remarks
1	2	3	4	5	6	7
1	Bolt head carrier	1013–20.140	205670			
2	Cylindrical pin	1013–02.18	200454			
3	Bolt head locking lever	1013–02.15	200452			
4	Compression spring for bolt head 1 locking lever	1013–02.16	200453			
5	Bolt head, compl.	1013–02.06	200442			
6	Extractor spring	1013–02.09	200445			
7	Extractor	1013–02.08	200444			
8	Clamping sleeve	1013–02.12	200450			
9	Holder for locking rollers	1013–02.11	200449			
10	Locking roller	1013–02.10	200446			normal 8 mm
10.1	Locking roller	1013–02.100	200447			oversize 0.02 mm
10.2	Locking roller	1013–02.101	200448			oversize 0.04 mm
11	Locking piece	1013–02.01	200439			
12	Firing pin spring	1013–02.05	200441			
13	Firing pin	1013–02.04	200440			

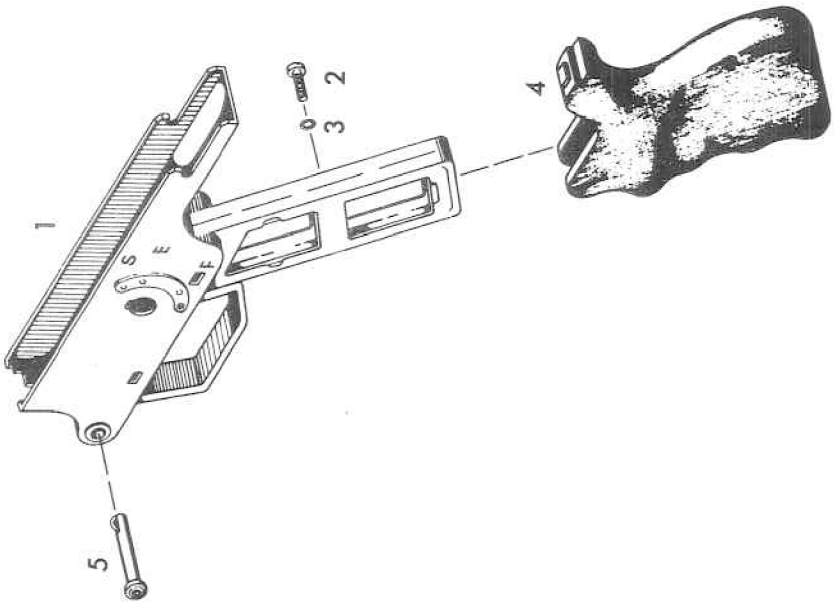
1
S
E
F
2
3
4
5

HECKLER & KOCH GMBH OBERNDORF/NECKAR	Rifle G3 Export	Grip Assembly	cf. Illustration 4	Edition: 1a/TD 2291 Page: 1

Item	Parts Designation	Part No.	Ident. No.	Qty of parts per 100 arms/ devices	Req. per Maint. Unit	Remarks
1	2	3	4	5	6	7
1	Pistol grip					Part No. and Ident. No. acc. to contract
2	Lenshead cylindrical screw	AM 5 x 10 DIN 85–8G	922613			
3	Toothed lock washer	J 5.3 DIN 6797	922616			
4	Grip	1013–03.08	200462			
5	Locking pin for pistol grip and handguard	1013–03.01	200459			

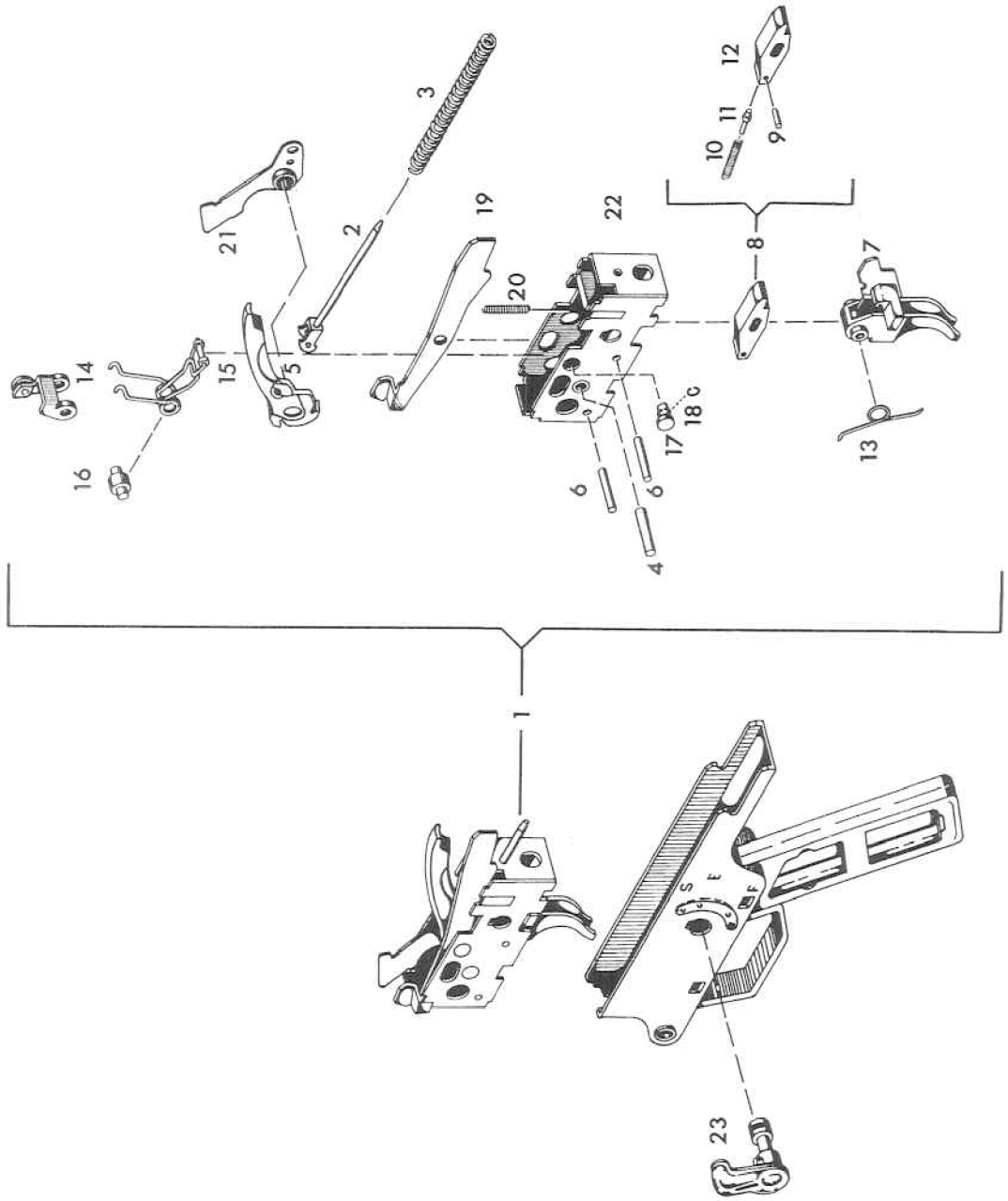
1
2
3
4
5
6
6
7
8
9
10
11
12
13
14
15
16
17
18
19
20
21
22
23
S
E
F

HECKLER & KOCH GMBH OBERNDORF/NECKAR	Rifle G3 Export	Trigger mechanism	cf. Illustration 5	Edition: 1a/TD 2291 Page: 1

Item	Parts Designation	Part No.	Ident. No.	Qty of parts per 100 arms/ devices	Req. per Maint. Unit	Remarks
1	2	3	4	5	6	7
1	Trigger housing, compl.	100229/5–03.30	206571			
2	Pressure shank	1013–03.63	200497			
3	Hammer spring	1013–03.64	200498			
4	Axle for hammer	1013–03.61	200494			
5	Hammer	100229/74–03.62	205860			
6	Axle for trigger, sear and catch	1013–03.40	200482			
7	Trigger, compl.	1013–03.45/1	205629			
8	Sear, compl.	1013–03.55	200489			
9	Clamping sleeve	1013–02.12	200450			
10	Compression spring for sear	1013–03.58	200493			
11	Trigger bolt for sear	1013–03.57	200492			
12	Sear	1013–03.56	200490			
13	Trigger spring	1013–03.41	200483			

Item	Parts Designation	Part No.	Ident. No.	Qty of parts per 100 arms/ devices	Req. per Maint. Unit	Remarks
1	2	3	4	5	6	7
14	Catch with roller	1013–03.72/I/41	200871			
15	Elbow spring with roller	1013–03.78	200505			
16	Distance sleeve for catch	1013–03.77	200504			
17	Axle for ejector, compl.	1013–03.33	200479			
18	Spring ring	1013–03.34	200481			
19	Ejector	1013–03.39	200477			
20	Ejector spring	1013–03.37	200478			
21	Release lever, compl.	100407–332	202054			
22	Trigger housing, finished	1013–03.861	205657			
23	Fire selector lever, compl.	1013–03.14/1	205621			

Back plate with butt stock

Illustration 6

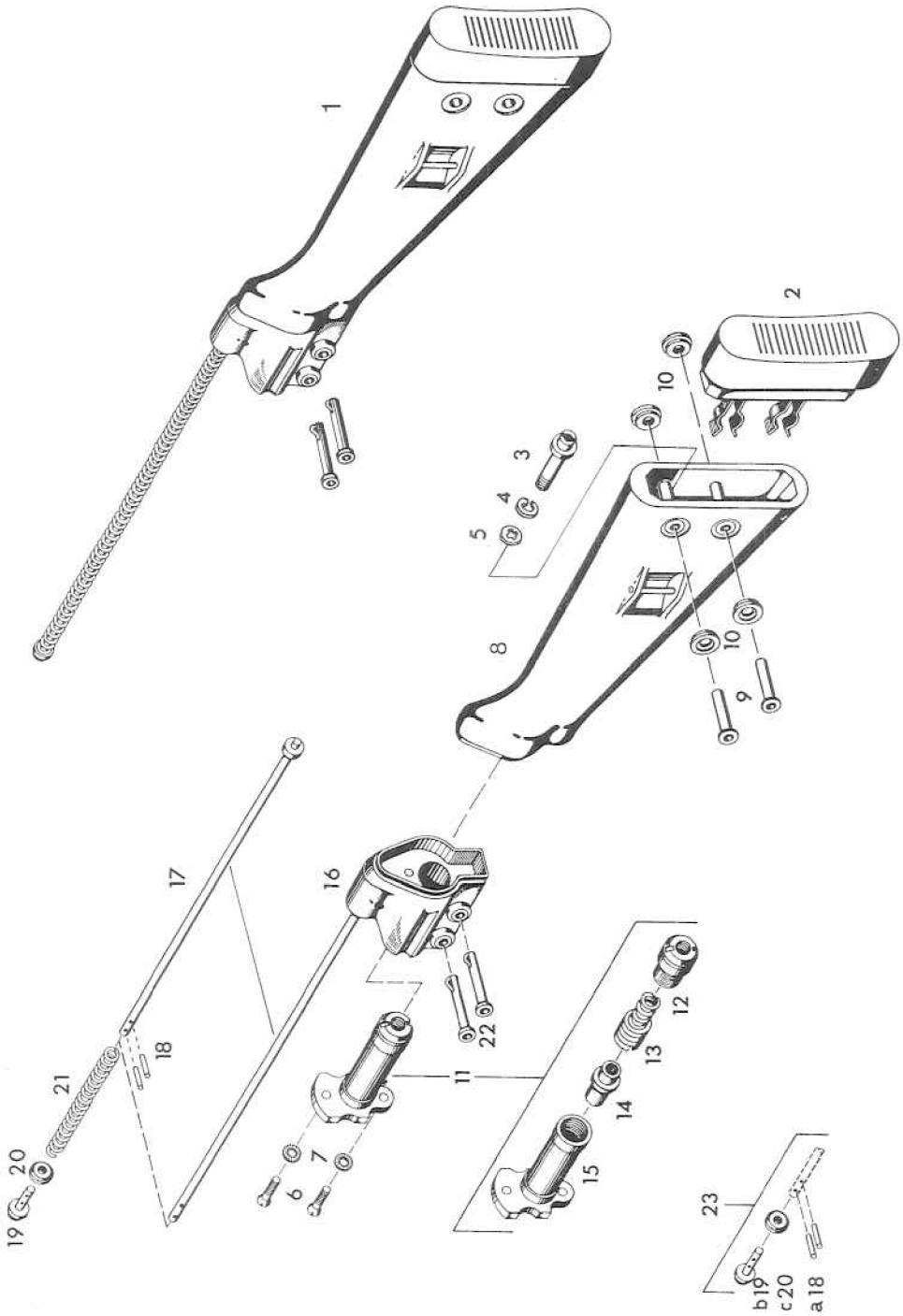

HECKLER & KOCH GMBH OBERNDORF/NECKAR	Rifle G3 Export	Back plate with butt stock	cf. Illustration 6	Edition: 1a/TD 2291 Page: 1

Item	Parts Designation	Part No.	Ident. No.	Qty of parts per 100 arms/ devices	Req. per Maint. Unit	Remarks
1	2	3	4	5	6	7
1	Back plate with butt stock	100229/5–499	206596			
2	Butt plate with catch spring	1013–041.12	200527			
3	Buffer screw, self-locking	1013–041.17	200531			
4	Spring ring	A 8 DIN 127	928147			
5	Toothed lock washer	J 8.4 DIN 6798	922614			
6	Countersunk screw for buffer, self-locking	1013–041.31	200543			
7	Toothed lock washer	V 5.3 DIN 6798	922615			
8	Butt stock with holder for buffer housing	100229–041.21	206577			
9	Tubular rivet for butt stock	1013–04.23	200537			
10	Bush for tubular rivet	1013–041.24	202009			
11	Buffer	1013–04.550	200555			
12	Buffer closure	1013–04.610	200557			
13	Buffer spring with brake rings	1013–04.585	200558			

Item	Parts Designation	Part No.	Ident. No.	Qty of parts per 100 arms/ devices	Req. per Maint. Unit	Remarks
1	2	3	4	5	6	7
14	Buffer bolt	1013–04.570	200561			
15	Buffer housing	1013–04.56	200556			
16	Back plate, compl.	1013–04.40/1	205633			
17	Recoil spring guide rod	1013–04.43	200547			
18	Rivet	1013–04.11	200526			
19	Recoil spring stop pin	1013–04.09	200523			to Item 23
20	Recoil spring guide ring	1013–04.10	200524			
21	Recoil spring	1013–04.08	200525			
22	Butt stock locking pin, compl.	1013–04.01	200520			
23	Spare parts set for back plate, consisting of:	St 1013–200	200992			
	a) 2 Rivets					see Item 18
	b) 1 Stop pin					see Item 19
	c) 1 Guide ring					see Item 20

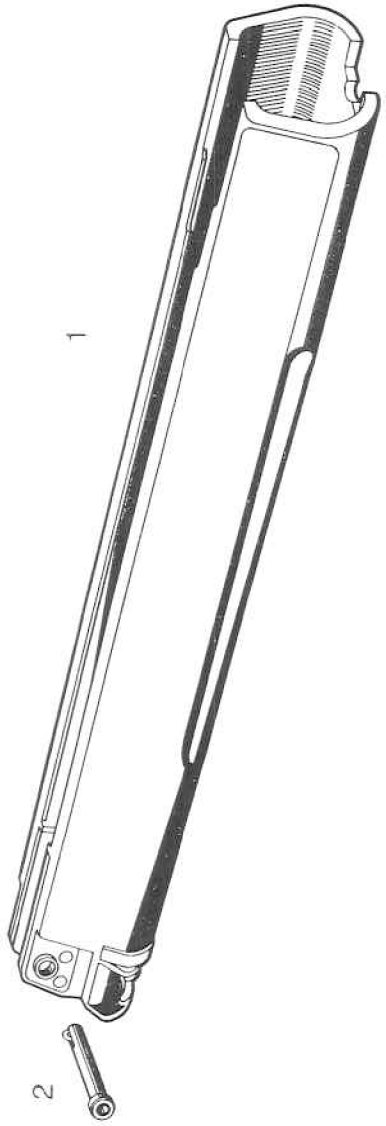
1
2

HECKLER & KOCH GMBH OBERNDORF/NECKAR	Rifle G3 Export	Handguard	cf. Illustration 7	Edition: 1a/TD 2291 Page: 1

Item	Parts Designation	Part No.	Ident. No.	Qty of parts per 100 arms/ devices	Req. per Maint. Unit	Remarks
1	2	3	4	5	6	7
1	Handguard	100229/1–1691.16	205977			
2	Handguard locking pin, compl.	1013–03.01	200459			

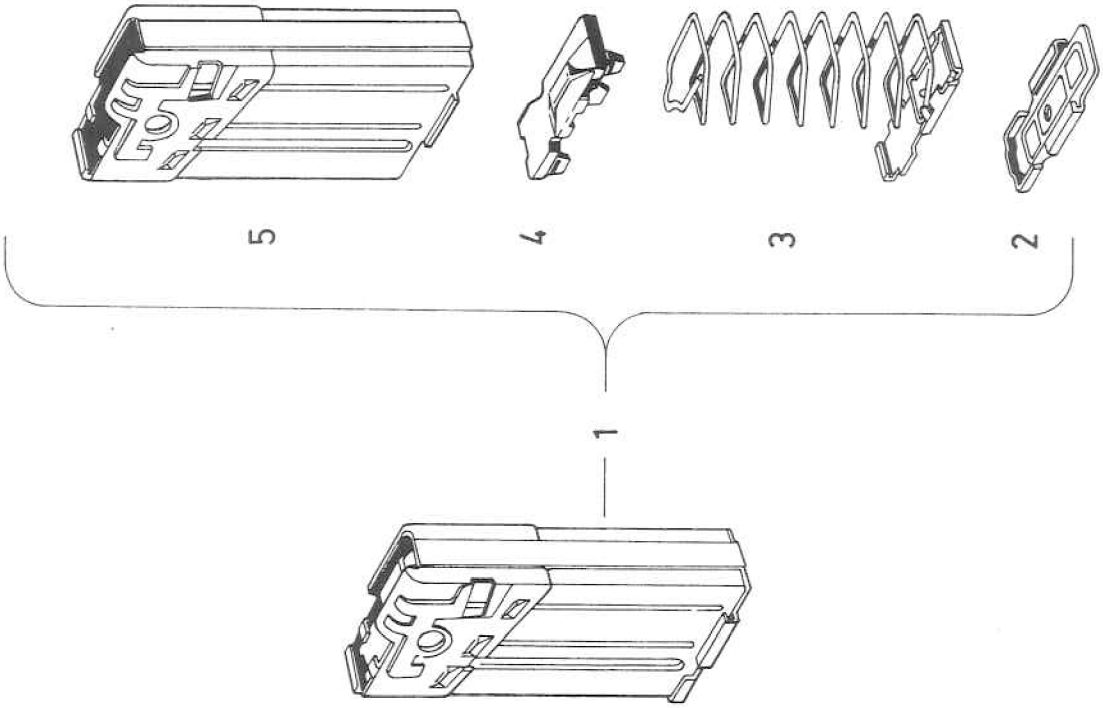
1
5
4
3
2

HECKLER & KOCH GMBH
OBERNDORF/NECKAR

Rifle G3 Export

Magazine 7.62 mm x 51

cf. Illustration 8

Edition: 1a/TD 2291

Item	Parts Designation	Part No.	Ident. No.	Qty of parts per 100 arms/ devices	Req. per Maint. Unit	Remarks
1	2	3	4	5	6	7
1	Magazine for rifle G3	1015–10	205554			
2	Magazine floor plate	1015–11.10	200587			
3	Follower spring with locking plate	1015–10.02	206659			
4	Follower, compl.	1015–01.12	200595			
5	Magazine housing, compl.	1015–10.04	205555			

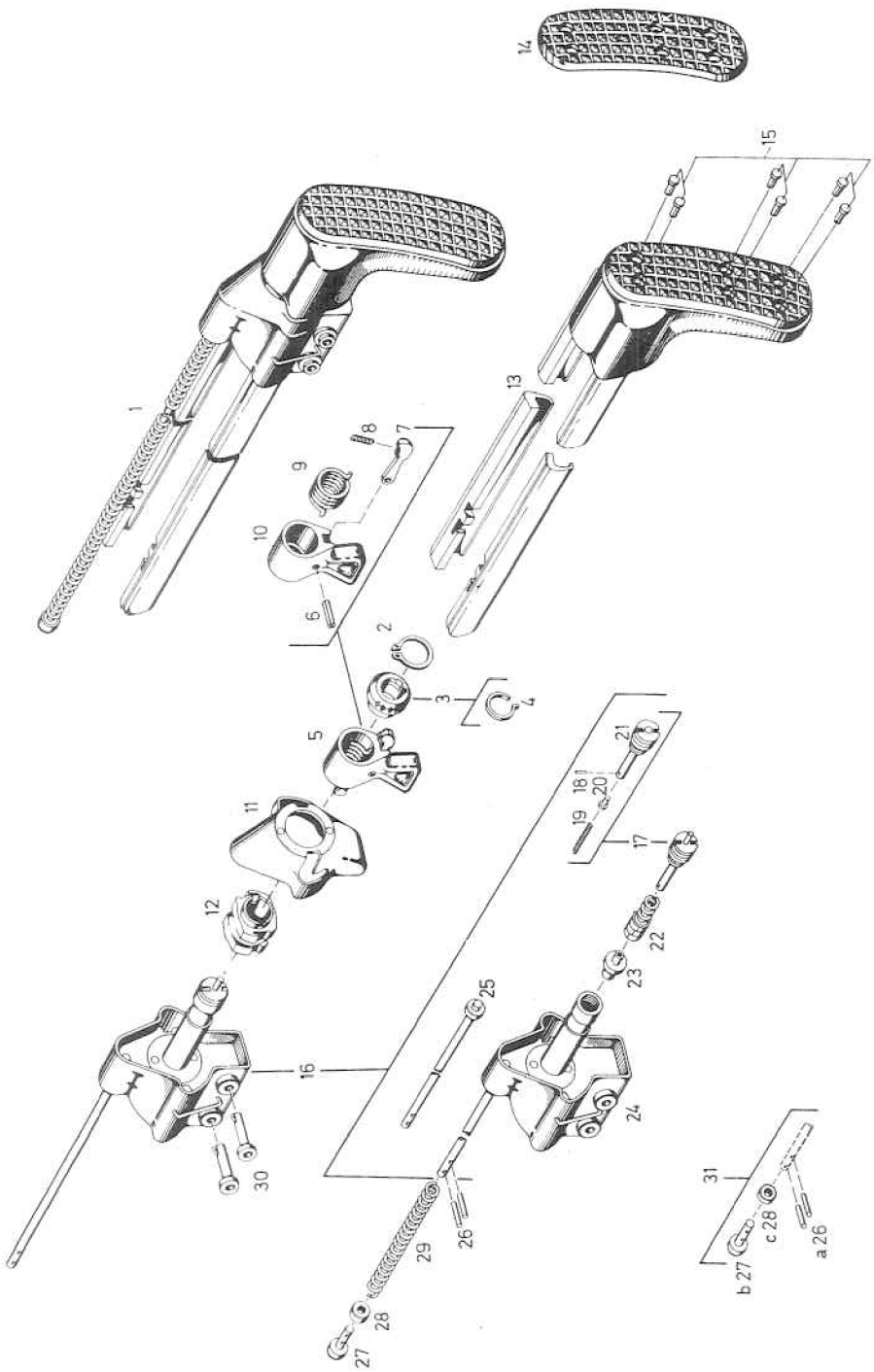
14
15
1
13
8
7
9
10
6
2
3
4
5
21
18
20
19
17
11
12
22
23
25
16
24
30
31
c 28
a 26
b 27
29
26
28
27

HECKLER & KOCH GMBH OBERNDORF/NECKAR	Rifle G3 Export	Retractable butt stock	cf. Illustration 9	Edition: 1a/TD 2291 Page: 1

Item	Parts Designation	Part No.	Ident. No.	Qty of parts per 100 arms/ devices	Req. per Maint. Unit	Remarks
1	2	3	4	5	6	7
1	Retractable butt stock	100229–404/1	206728			
2	Spring ring	A 19 x 1.5 SDOO	928404			
3	Locking ring with stop spring	1013–40.29	200952			
4	Catch spring	1013–40.31	200954			
5	Clamping lever with ratchet and tension spring	1013–40.23/1	205838			
6	Clamping sleeve	1013–40.41	200959			
7	Ratchet	1013–40.33	200957			
8	Compression spring	1013–40.34	200958			
9	Tension spring	1013–40.27	200956			
10	Clamping lever	1013–40.24/1	205842			
11	Protective cover with plug	1013–40.20/1	205839			
12	Gripping lever	1013–40.32	200951			
13	Retractable butt stock with butt cap	1013–402.50	206581			

Item	Parts Designation	Part No.	Ident. No.	Qty of parts per 100 arms/ devices	Req. per Maint. Unit	Remarks
1	2	3	4	5	6	7
14	Butt cap	100229–402.53	206583			
15	Rivet	100229–401.56	206557			
16	Back plate with recoil spring guide rod and buffer	100229–404.35	206828			without drawing
17	Buffer closure with pressure bolt and compression spring	100229–404.100	206726			
18	Clamping sleeve	1013–40.41	200959			
19	Compression spring	1013–40.13	200985			
20	Pressure bolt	1013–40.12	200984			
21	Buffer screw	100229–404.101	206725			
22	Buffer spring with brake rings	1013–04.585	200558			
23	Buffer bolt	1013–40.14	200975			
24	Back plate with recoil spring guide rod	1013–40.15/1	205841			
25	Recoil spring guide rod	1013–04.43	200547			
26	Rivet	1013–04.11	200526			to Item 31

Item	Parts Designation	Part No.	Ident. No.	Qty of parts per 100 arms/ devices	Req. per Maint. Unit	Remarks
1	2	3	4	5	6	7
27	Stop pin for recoil spring guide rod	1013–04.09	200523			to Item 31
28	Recoil spring guide ring	1013–04.10	200524			to Item 31
29	Recoil spring	1013–04.08	200525			
30	Butt stock locking pin, compl.	1013–04.01	200520			
31	Spare parts set for back plate, consisting of:	St 1013–200	200992			
	a) 2 Rivets					see Item 26
	b) Stop pin					see Item 27
	c) 1 Guide ring					see Item 28